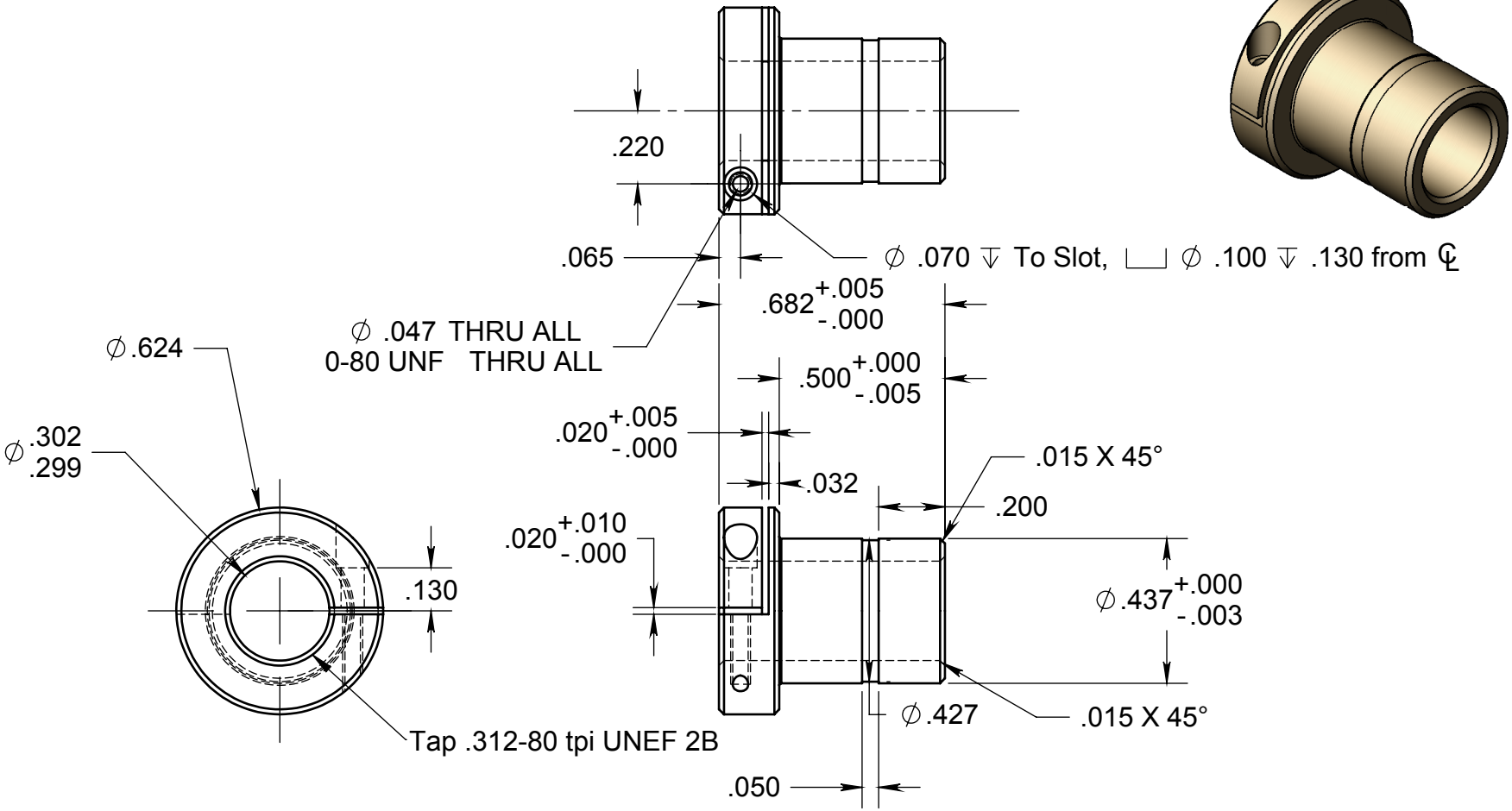

		DIMENSIONS ARE IN INCHES TOLERANCES: FRACTIONAL ±.03 ANGULAR: MACH ±.5 BEND ±1 TWO PLACE DECIMAL ±.010 THREE PLACE DECIMAL ±.005		NAME	DATE
			DRAWN		
			CHECKED		
			ENG APPR.		
			MFG APPR.		
		MATERIAL --	Q.A.		
			COMMENTS:		
NEXT ASSY	USED ON	FINISH --			
APPLICATION		DO NOT SCALE DRAWING			

PROPRIETARY AND CONFIDENTIAL
THE INFORMATION CONTAINED IN THIS DRAWING IS THE SOLE PROPERTY OF HITEK HARDWARE, INC. ANY REPRODUCTION IN PART OR AS A WHOLE WITHOUT THE WRITTEN PERMISSION OF HITEK HARDWARE, INC. IS PROHIBITED.

Hitek Hardware, Inc.

PS312-80-500 LC

SIZE	DWG. NO.	REV.
A		A

SCALE:2:1 | WEIGHT: | SHEET 1 OF 1